Robin Engine

Model EX21

PARTS CATALOG

Spec. No.	Spec. Name
EX210D00000	STD
EX210D10010	EX, PUMP
EX210D10020	EX, DU, DUAL, CABLE CONTROL
EX210D20010	GEN, DUAL, OS
EX210D40010	DUAL, CABLE CONTROL
EX210D50000	EX, DU
EX210D50020	EX, DU, DUAL, CABLE CONTROL, OS
EX210D51010	EX, DP(5/8), DUAL, OS
EX210D52010	EX, DH, DUAL, OS
EX210D52020	EX, DH, 50, OS

FUJI HEAVY INDUSTRIES LTD.

ISSUE EMD-EP 5847A	
ISSUE DATE	2002 . 6

CONTENTS

	Fig.No
1. CRANK CASE	100
2. CRANKSHAFT, PISTON	200
3. INTAKE EXHAUST	300
Air Cleaner(dual)	315
4. GOVERNOR, OPERATION	400
5. COOLING, STARTING	500
Recoil Starter	520
6. FUEL LUBRICANT	600
Carburetor	640
7. ELECTRIC DEVICE	700
Oil level Sensor	770
9. ACCESSORIES LABEL	900

FIG. 100

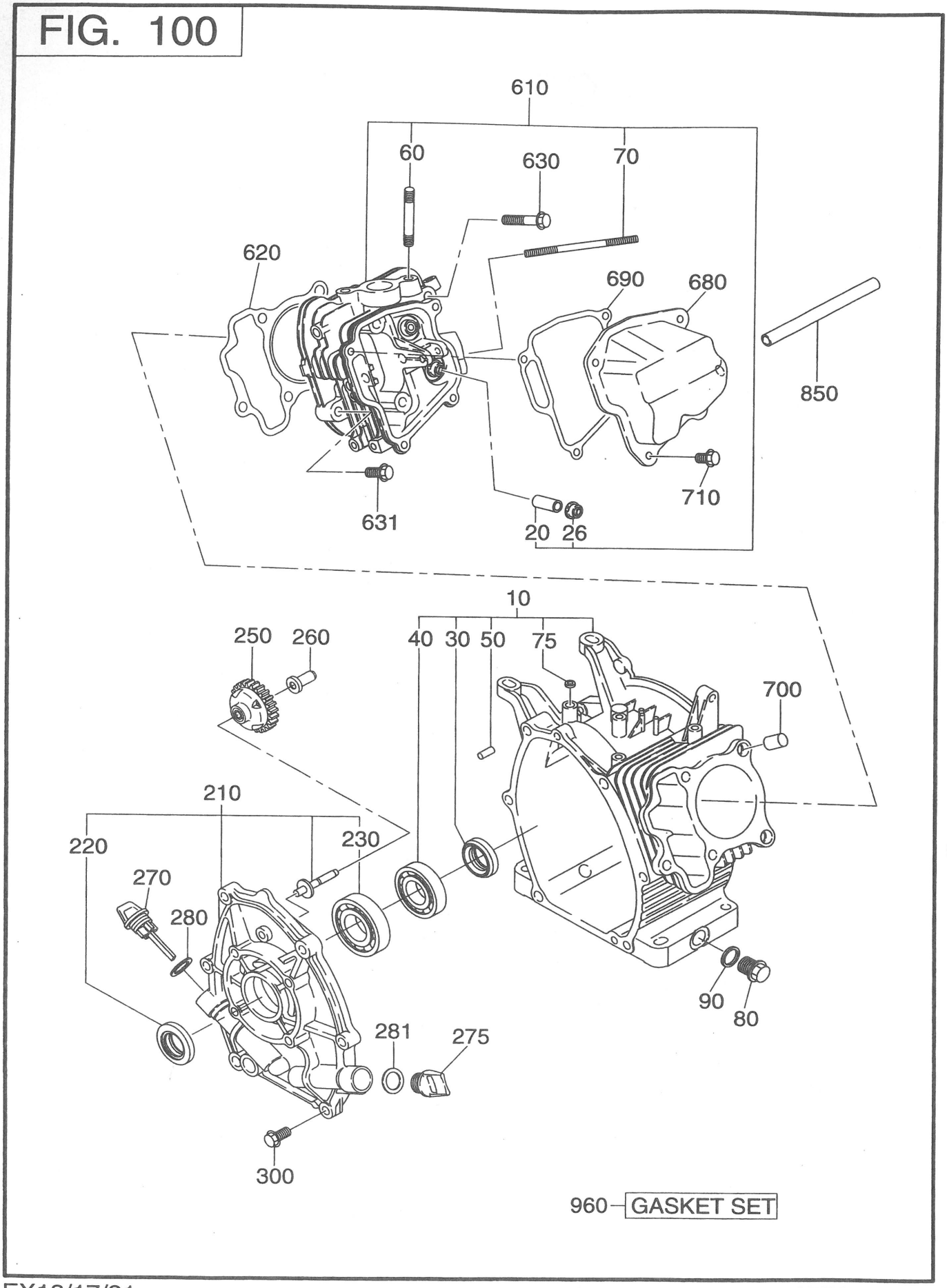

EX13/17/21

2770100002

1 CRANK CASE

REF. NO.	PART NUMBER	PART NAME	CODE NO. FROM - TO	QTY	REMARKS	INTERCHANGEABLE PART NUMBER	FIG. NO.
	PART NUMBER	SPEC. NO.					
10	278-10101-01	CRANK CASE CP	-	1			100
	278-10102-01	EX210D20010	-	1	W/OIL SENSOR		100
		EX210D50020	-	1			100
		EX210D51010	-	1			100
		EX210D52010	-	1			100
		EX210D52020	-	1			100
20	237-14202-03	VALVE GUIDE	-	2	5.5DX9.5DX27L		100
26	277-16010-01	STEM SEAL	-	1	5DX11.6DX15DX7.8T		100
30	044-02502-00	OIL SEAL	-	1	24.5DX38DX7T		100
40	060-02800-20	BALL BEARING	-	1	28DX58DX16B		100
50	277-15011-03	PIPE KNOCK	-	2	10DX8.5DX14L		100
60	010-50802-50	STUD	-	2	M8X1.25X25L		100
70	010-50603-51	STUD	-	2	M6X1.0X98L		100
75	044-00600-20	OIL SEAL	-	1	5.6DX10DX2.5T		100
80	040-11400-30	PLUG	-	2	M14X1.5X20DX12L		100
90	021-11400-20	GASKET	-	2	14.1DX19DX2.3T		100
210	277-11001-11	MAIN BEARING COVER C	-	1	FLANGE 4-M8X1.25		100
	277-11002-01	EX210D10020	-	1	FLANGE 4-5/16-24UNF		100
		EX210D50000	-	1			100
		EX210D50020	-	1			100
		EX210D51010	-	1			100
		EX210D52010	-	1			100
		EX210D52020	-	1			100
220	044-02502-10	OIL SEAL	-	1	24.5DX41.25DX6T		100
230	060-02500-10	BALL BEARING	-	1	6205 25DX52DX15B		100
250	277-45004-21	GOVERNOR GEAR CP	-	1	52.5DX29T N=33		100
260	263-41901-03	GOVERNOR SLEEVE	-	1	6DX7.6DX16DX26L		100
270	277-63601-03	OIL GAUGE	-	1	M18X1.5 L=70+18		100
275	277-65001-03	FILLER PLUG	-	1	M18X1.5 L=12+18		100
280	021-31600-20	GASKET	-	1	16DX23DX2.2T		100
281	021-31600-20	GASKET	-	1	16DX23DX2.2T		100
300	001-04083-50	FLANGE BOLT	-	6			100
610	278-13001-01	CYLINDER HEAD CP	-	1			100
620	277-15001-13	GASKET (HEAD)	-	1			100
630	011-00802-40	FLANGE BOLT	-	4	M8X1.25X68L		100
631	001-04083-50	FLANGE BOLT	-	1			100

1 CRANK CASE

REF. NO.	PART NUMBER	PART NAME	CODE NO. FROM - TO	QTY	REMARKS	INTERCHANGEABLE PART NUMBER	FIG. NO.
	PART NUMBER	SPEC. NO.					
680	277-15501-01	ROCKER COVER CP	-	1			100
690	277-16001-03	GASKET(ROCKER COVER)	-	1	T=0.7		100
700	277-15011-03	PIPE KNOCK	-	2	10DX8.5DX14L		100
710	011-00600-20	FLANGE BOLT	-	4	M6X1.0X12L		100
850	085-10800-00	RUBBER PIPE	-	1	8DX11D		100
960	277-99001-07	GASKET SET	-	1			100

FIG. 200

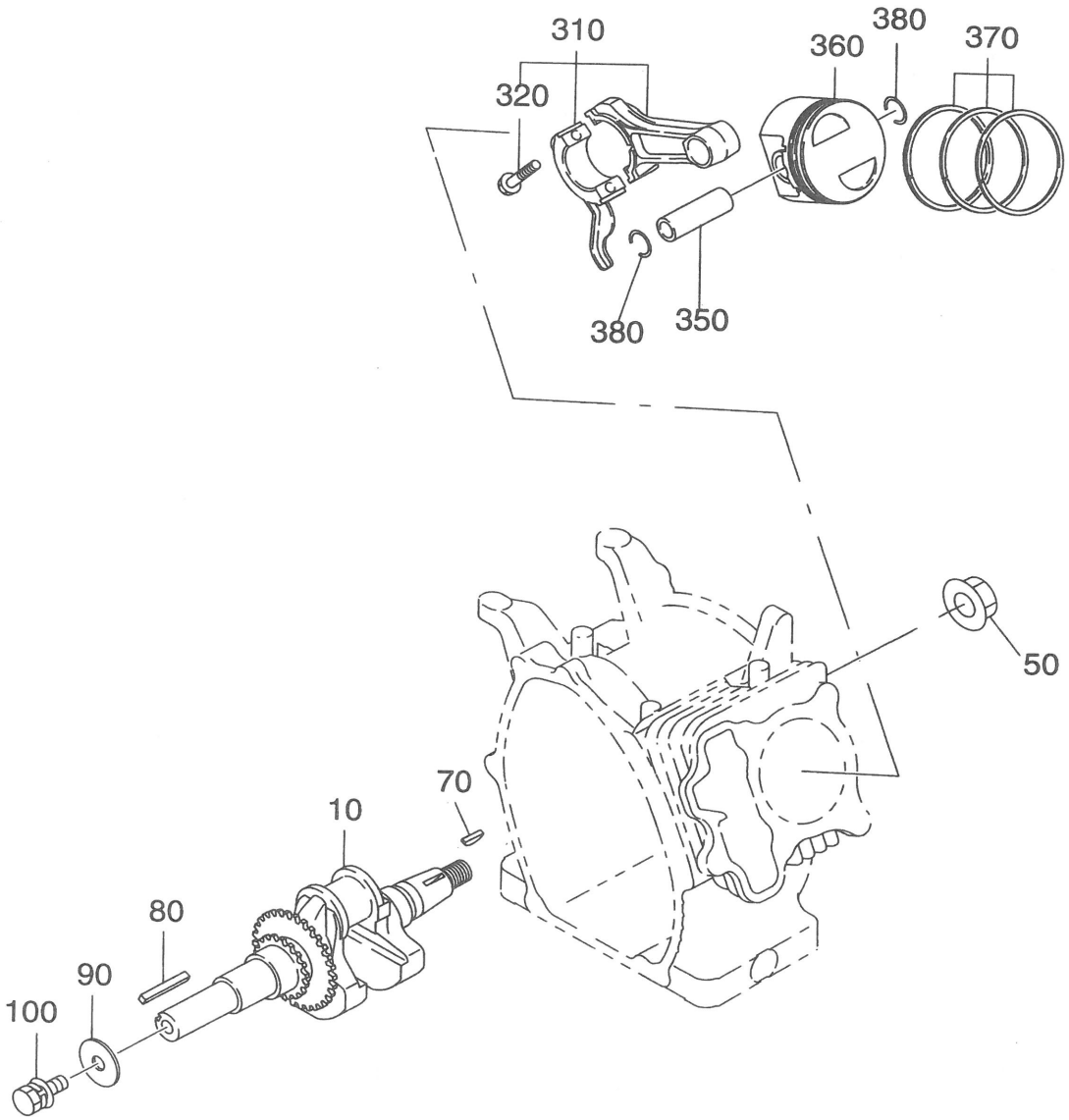

EX13/17/21

2770200002

2 CRANKSHAFT, PISTON

REF. NO.	PART NUMBER	PART NAME	CODE NO. FROM - TO	QTY	REMARKS	INTERCHANGEABLE PART NUMBER	FIG. NO.
	PART NUMBER	SPEC. NO.					
10	278-20201-01	CRANKSHAFT CP	-	1	L=252 PTO=20DX50L M8		200
	278-20301-01	EX210D10010	-	1	L=277 20DX55.4L+M18		200
	278-20701-01	EX210D20010	-	1	L=229 19DX1/5TAP M8		200
	278-20901-01	EX210D10020	-	1	L=260 19.05DX58.5 5/		200
		EX210D50000	-	1			200
		EX210D50020	-	1			200
	278-21001-01	EX210D51010	-	1	L=261 5/8-18UNFX23L		200
	278-21201-01	EX210D52010	-	1	L=271 17DX1/5TAPER		200
		EX210D52020	-	1			200
50	018-01400-20	FLANGE NUT	-	1	M14X28DX12H		200
70	032-30300-10	WOODRUFF KEY	-	1	3BX6HX16D		200
80	005-30053-01	KEY	-	1		032-00500-10	200
90	020-00800-50	WASHER	-	1	8.5DX28DX2.3T		200
100	001-13082-00	BOLT & WASHER AY	-	1			200
310	278-22501-10	CONNECTING ROD AY	-	1			200
320	277-23001-03	CONNECTING ROD BOLT	-	2	M6X1.0X33L		200
350	277-23301-03	PISTON PIN	-	1	16DX11DX48.5L		200
360	277-23401-03	PISTON	-	1	STD. (66DX40H)		200
370	277-23511-07	PISTON RING SET	-	1	STD. OIL:EXPANDER		200
	277-23501-07	EX210D20010	-	1	STD. OIL:3 PIECES		200
		EX210D52010	-	1			200
380	056-51600-10	CLIP	-	2	15.7DX1.4D		200

FIG. 300

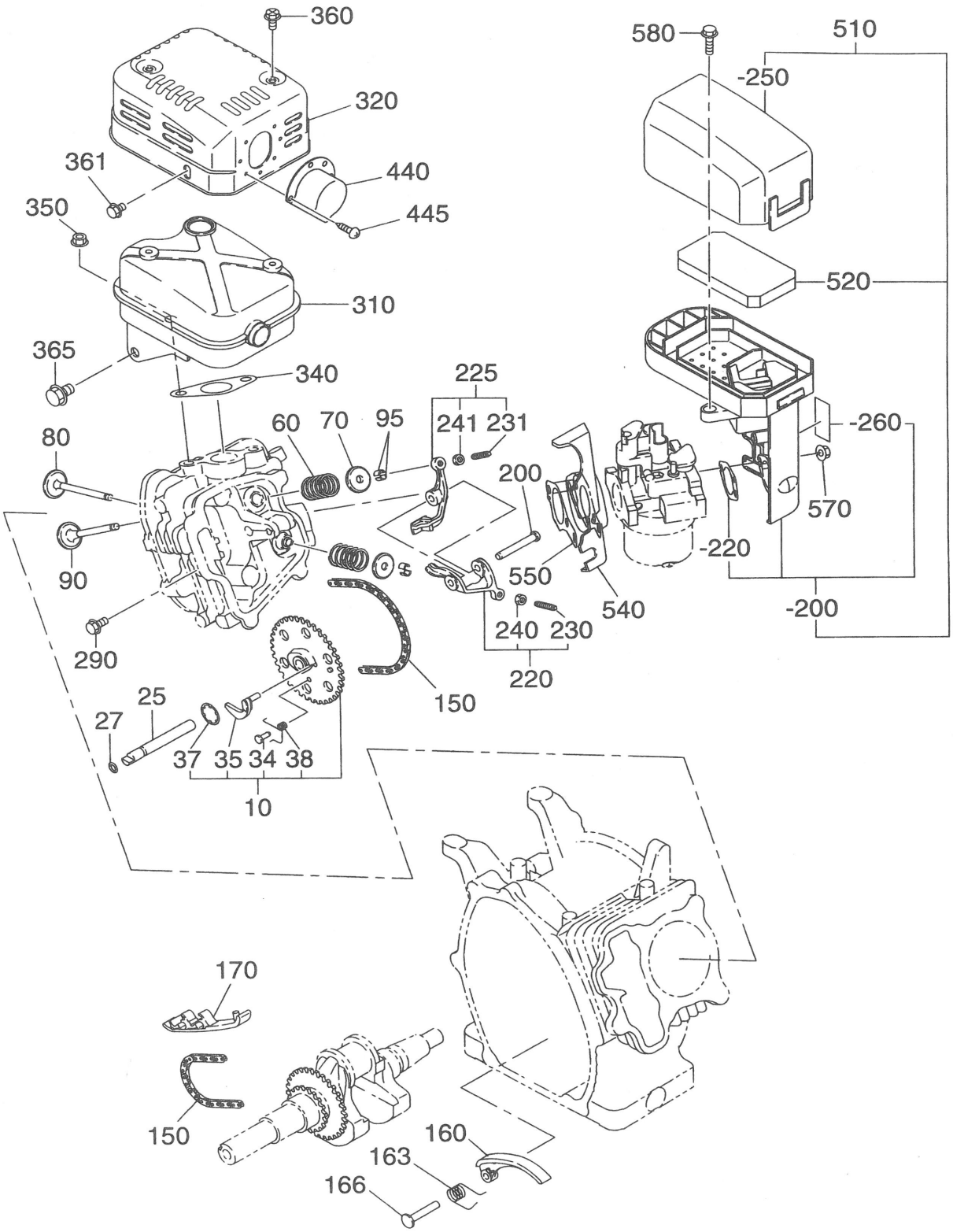

EX13/17/21

2770300002

FIG. 315

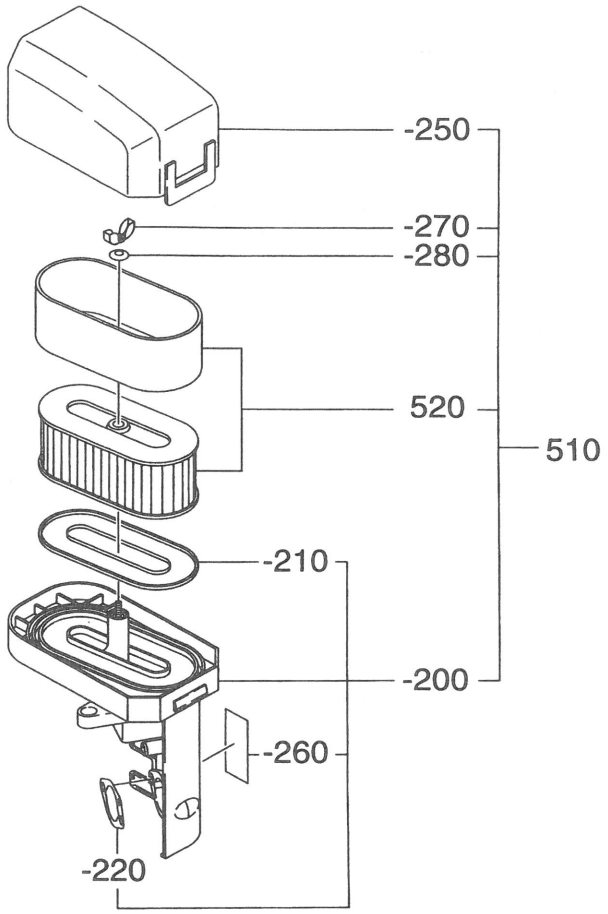

EX13/17/21

2770315002

3 INTAKE EXHAUST

REF. NO.	PART NUMBER	PART NAME	CODE NO. FROM - TO	QTY	REMARKS	INTERCHANGEABLE PART NUMBER	FIG. NO.
	PART NUMBER	SPEC. NO.					
10	277-31601-01	CAM SHAFT CP	-	1	84.5DX32.4B N=40		300
25	277-35101-03	PIN(CAM SHAFT)	-	1	9DX78.5L		300
27	024-00600-10	O RING	-	1	5.8DX9.6DX1.9T		300
34	277-38601-03	PIN(SPRING)	-	1	4DX7.5DX11L		300
35	277-36401-03	RELEASE LEVER	-	1			300
37	277-36501-03	CLIP	-	1	13.8DX20.3DX0.4T		300
38	277-38701-03	RETURN SPRING	-	1			300
60	279-33601-03	VALVE SPRING	-	2	17DX2.3DX27L N=5.8		300
70	269-33701-03	SPRING RETAINER	-	2			300
80	277-33401-13	INTAKE VALVE	-	1	25.5DX5.5DX68.1L		300
90	277-33501-13	EXHAUST VALVE	-	1	23.5DX5.5DX68.1L		300
95	132-10KA0-31	COLLET-VALVE	-	4			300
150	278-35601-01	TIMING CHAIN CP	-	1	92 LINK		300
160	277-36911-03	TENTIONER	-	1			300
163	277-37101-03	SPRING(TENTIONER)	-	1			300
166	277-36902-03	PIN(TENTIONER)	-	1	6DX13DX34L		300
170	277-36913-13	CHAIN GUIDE	-	1			300
200	277-35001-03	PIN(ROCKER)	-	1	6DX9DX41L		300
220	277-36101-00	ROCKER ARM(IN) AY	-	1			300
225	277-36102-00	ROCKER ARM(EX) AY	-	1			300
230	014-90500-10	ADJUST SCREW	-	1	M5X0.5X23L		300
231	014-90500-10	ADJUST SCREW	-	1	M5X0.5X23L		300
240	017-00500-20	NUT	-	1	M5X0.5X4.1H		300
241	017-00500-20	NUT	-	1	M5X0.5X4.1H		300
290	011-00600-20	FLANGE BOLT	-	1	M6X1.0X12L		300
310	278-30101-11	MUFFLER CP	-	1			300
320	277-34201-01	MUFFLER COVER CP	-	1			300
340	277-35201-03	GASKET(MUFFLER)	-	1	26D 9DX58P 0.2T		300
350	980-20082-80	FLANGE NUT	-	2			300
360	015-20600-90	TAPPING BOLT	-	2	M6X1.0X10L		300
361	011-00600-10	FLANGE BOLT	-	1	M6X1.0X8L		300
365	011-00801-50	FLANGE BOLT	-	1	M8X1.25X12L		300
440	* * * * * *	DEFLECTOR					
	277-37001-03	EX210D10020	-	1			300
		EX210D40010	-	1			300
		EX210D50020	-	1			300

3 INTAKE EXHAUST

REF. NO.	PART NUMBER	PART NAME	CODE NO. FROM - TO	QTY	REMARKS	INTERCHANGEABLE PART NUMBER	FIG. NO.
	PART NUMBER	SPEC. NO.					
445	* * * * * *	TAPPING SCREW					
	015-00400-60	EX210D10020	-	2			300
		EX210D40010	-	2			300
		EX210D50020	-	2			300
510	277-32611-00	AIR CLEANER AY	-	1			300
	277-32612-00	EX210D10020	-	1	DUAL		315
		EX210D20010	-	1			315
		EX210D40010	-	1			315
		EX210D50020	-	1			315
		EX210D51010	-	1			315
		EX210D52010	-	1			315
-200	277-32601-08	BASE CP	-	1			300
	277-32605-08	EX210D10020	-	1			315
		EX210D20010	-	1			315
		EX210D40010	-	1			315
		EX210D50020	-	1			315
		EX210D51010	-	1			315
		EX210D52010	-	1			315
-210	* * * * * *	PACKING					
	277-32610-08	EX210D10020	-	1			315
		EX210D20010	-	1			315
		EX210D40010	-	1			315
		EX210D50020	-	1			315
		EX210D51010	-	1			315
		EX210D52010	-	1			315
-220	277-32604-08	PACKING	-	1			300
-250	277-32602-08	COVER CP	-	1			300
-260	277-32609-08	LABEL	-	1			300
-270	* * * * * *	WING NUT					
	277-32607-08	EX210D10020	-	1			315
		EX210D20010	-	1			315
		EX210D40010	-	1			315
		EX210D50020	-	1			315
		EX210D51010	-	1			315
		EX210D52010	-	1			315
-280	* * * * * *	WASHER					

3 INTAKE EXHAUST

REF. NO.	PART NUMBER	PART NAME	CODE NO. FROM - TO	QTY	REMARKS	INTERCHANGEABLE PART NUMBER	FIG. NO.
	PART NUMBER	SPEC. NO.					
-280	277-32608-08	EX210D10020	-	1			315
		EX210D20010	-	1			315
		EX210D40010	-	1			315
		EX210D50020	-	1			315
		EX210D51010	-	1			315
		EX210D52010	-	1			315
520	277-32603-08	ELEMENT	-	1			300
	277-32611-07	EX210D10020	-	1	DUAL		315
		EX210D20010	-	1			315
		EX210D40010	-	1			315
		EX210D50020	-	1			315
		EX210D51010	-	1			315
		EX210D52010	-	1			315
540	277-32901-13	INSULATOR	-	1			300
550	277-35901-13	GASKET(INSULATOR)	-	1			300
570	002-38060-00	FLANGE NUT	-	2			300
580	011-00600-50	FLANGE BOLT	-	1	M6X1.0X20L		300

FIG. 400

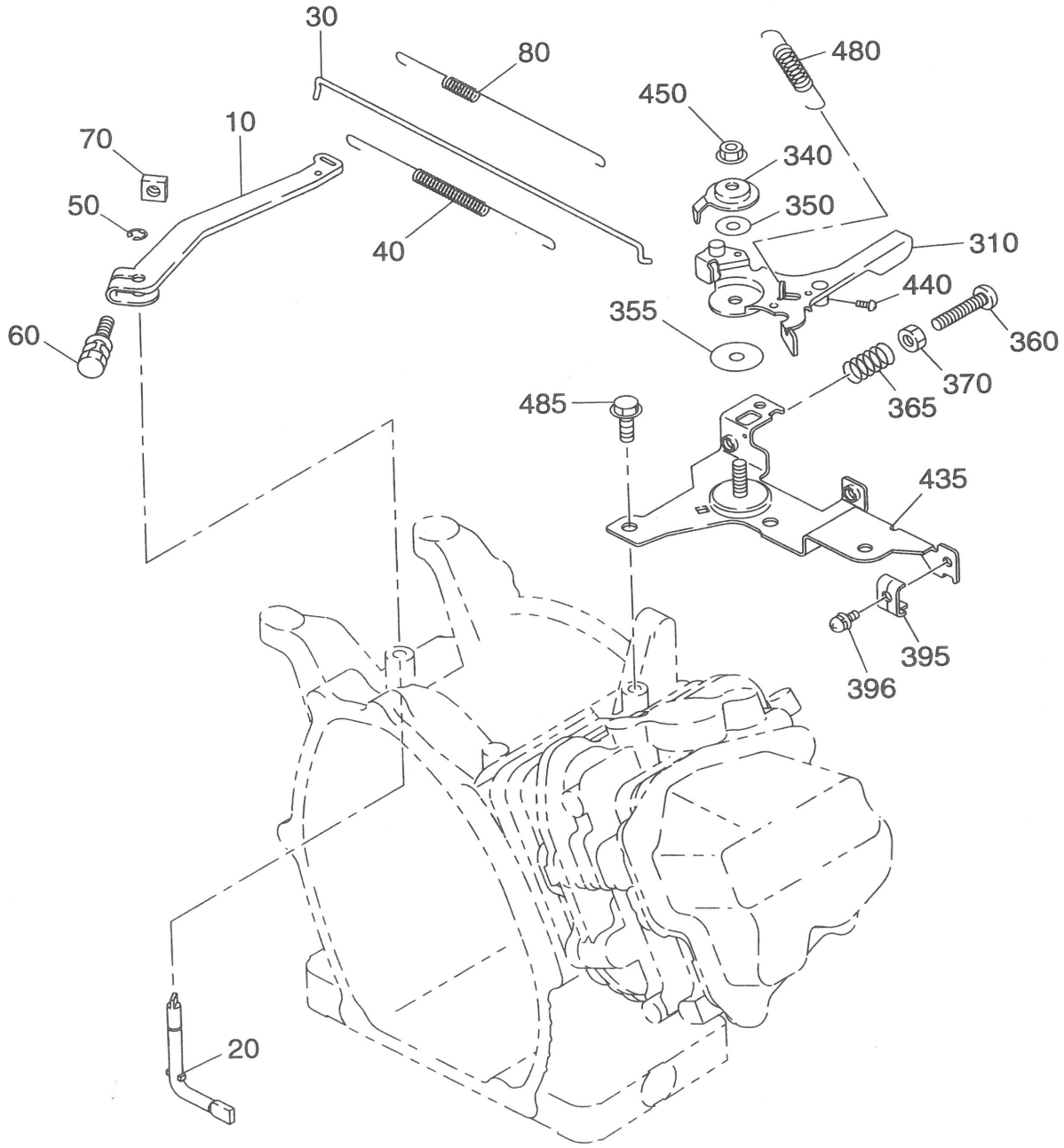

2770400003

EX13/17/21

4 GOVERNOR OPERATION

REF. NO.	PART NUMBER	PART NAME	CODE NO. FROM - TO	QTY	REMARKS	INTERCHANGEABLE PART NUMBER	FIG. NO.
	PART NUMBER	SPEC. NO.					
10	277-42301-13	GOVERNOR LEVER	-	1			400
20	277-42201-13	GOVERNOR SHAFT	-	1			400
30	277-42701-01	GOVERNOR ROD CP	-	1			400
40	277-42801-13	ROD SPRING	-	1	7DX0.5DX182L N=16		400
50	003-13050-00	CLIP	-	1			400
60	013-00602-40	BOLT AND WASHER AY	-	1			400
70	018-60600-20	NUT	-	1	M6X1.0X4.9H		400
80	279-42502-23	GOVERNOR SPRING	-	1			400
	279-42505-23	EX210D20010	-	1			400
		EX210D52020	-	1			400
310	277-43301-13	SPEED CONTROL LEVER	-	1			400
	277-43302-01	EX210D10020	-	1	W/SWIVEL		400
		EX210D40010	-	1			400
		EX210D50020	-	1			400
340	277-43501-03	STOP PLATE	-	1			400
350	020-00601-70	WASHER	-	1	6DX24DX2T		400
355	021-70600-70	FRICTION WASHER	-	1	6.5DX24DX0.8T		400
360	014-00601-80	SCREW	-	1	M6X1.0X35L		400
365	237-45004-23	SPRING (ADJUST)	-	1			400
370	002-17060-00	NUT	-	1			400
395	* * * * * *	CLAMP					
	277-43901-03	EX210D10020	-	1			400
		EX210D40010	-	1			400
		EX210D50020	-	1			400
396	* * * * * *	SCREW AND WASHER AY					
	004-36051-60	EX210D10020	-	1		001-17051-60	400
		EX210D40010	-	1			400
		EX210D50020	-	1			400
435	277-46001-01	SPEED CONT.BRKT CP	-	1			400
440	* * * * * *	SCREW					
	004-31040-80	EX210D10020	-	1			400
		EX210D40010	-	1			400
		EX210D50020	-	1			400
450	002-35060-00	SELF LOCK NUT	-	1			400
480	* * * * * *	RETURN SPRING					
	277-45101-03	EX210D10020	-	1			400

4 GOVERNOR OPERATION

REF. NO.	PART NUMBER	PART NAME	CODE NO. FROM - TO	QTY	REMARKS	INTERCHANGEABLE PART NUMBER	FIG. NO.
	PART NUMBER	SPEC. NO.					
480	277-45101-03	EX210D40010	-	1			400
		EX210D50020	-	1			400
485	011-00600-20	FLANGE BOLT	-	2	M6X1.0X12L		400

FIG. 500

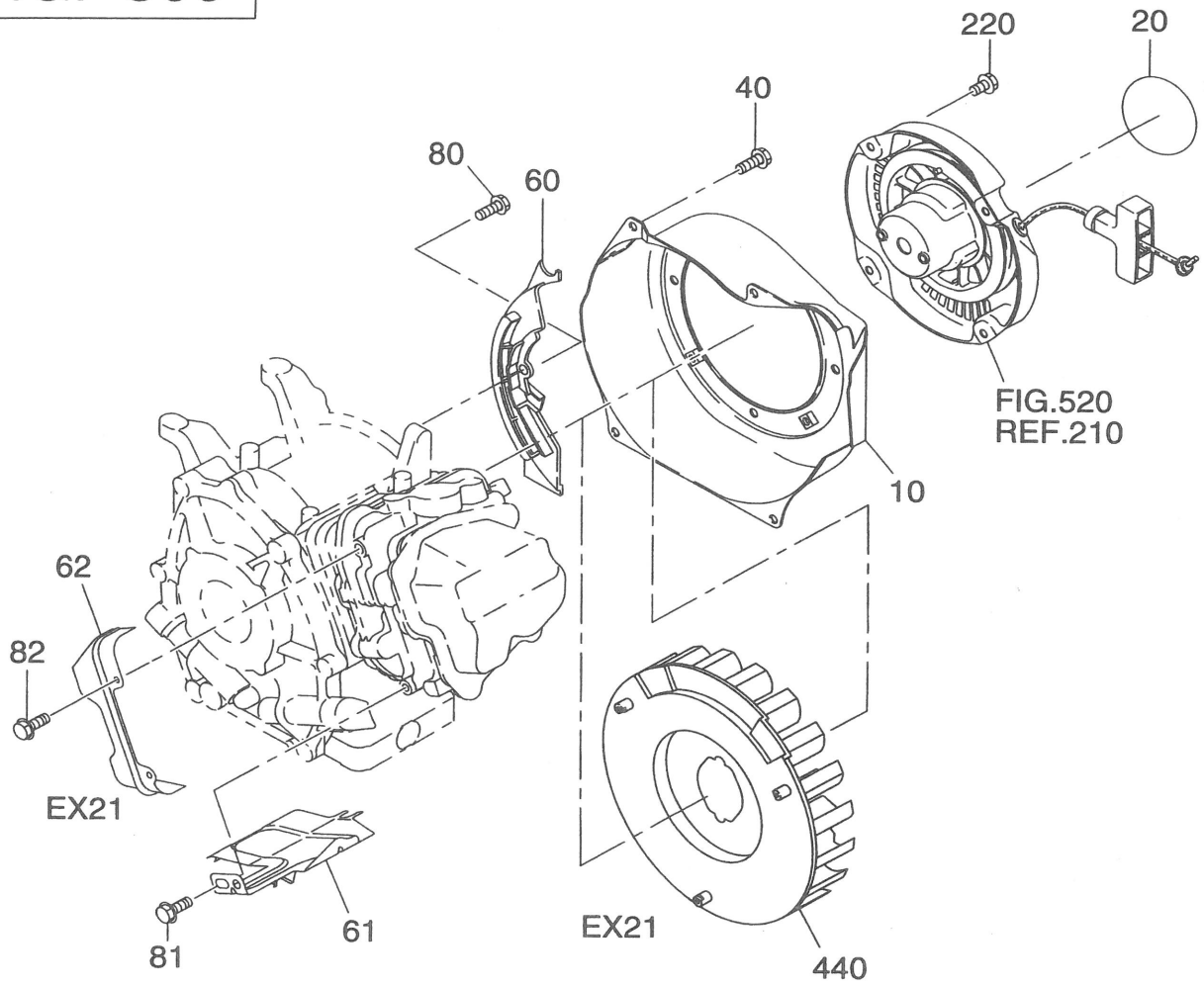

FIG. 520

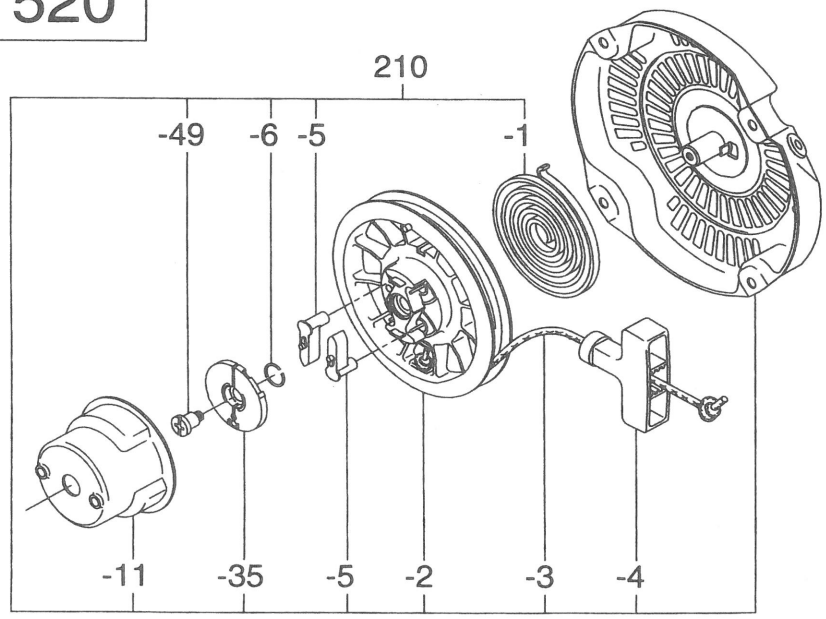

5 COOLING STARTING

REF. NO.	PART NUMBER	PART NAME	CODE NO. FROM - TO	QTY	REMARKS	INTERCHANGEABLE PART NUMBER	FIG. NO.
	PART NUMBER	SPEC. NO.					
10	278-51201-01	BLOWER HOUSING CP	-	1	NEW R YELLOW		500
	278-51202-01	EX210D50020	-	1	BLACK		500
		EX210D51010	-	1			500
		EX210D52010	-	1			500
20	073-20051-40	LABEL(TRADE MARK)	-	1	64D		500
40	011-00600-30	FLANGE BOLT	-	4	M6X1.0X14DX14L		500
60	277-52711-01	BAFFLE 1(CASE) CP	-	1			500
61	277-52702-03	BAFFLE 2(HEAD)	-	1			500
62	278-52701-03	BAFFLE 3	-	1			500
80	011-00600-20	FLANGE BOLT	-	1	M6X1.0X14DX12L		500
81	011-00600-20	FLANGE BOLT	-	1	M6X1.0X14DX12L		500
82	015-20500-10	TAPPING SCREW	-	2	M5X10L		500
210	278-50201-10	RECOIL STARTER AY	-	1			520
- 1	270-50115-08	SPIRAL SPRING	-	1			520
- 2	269-50120-08	REEL	-	1			520
- 3	106-50111-08	STARTER ROPE, HI-JUMP	-	1			520
- 4	261-50100-08	STARTER KNOB	-	1			520
- 5	270-50125-08	RATCHET	-	2			520
- 6	227-50131-08	FRICTION SPRING	-	1			520
- 11	278-50145-08	STARTER PULLY	-	1			520
- 35	270-50261-08	RATCHET GUIDE	-	1			520
- 49	227-50152-08	SET SCREW	-	1			520
220	011-00600-10	FLANGE BOLT	-	4	M6X1.0X14DX8L		500
440	278-54101-03	COOLING BLOWER	-	1			500

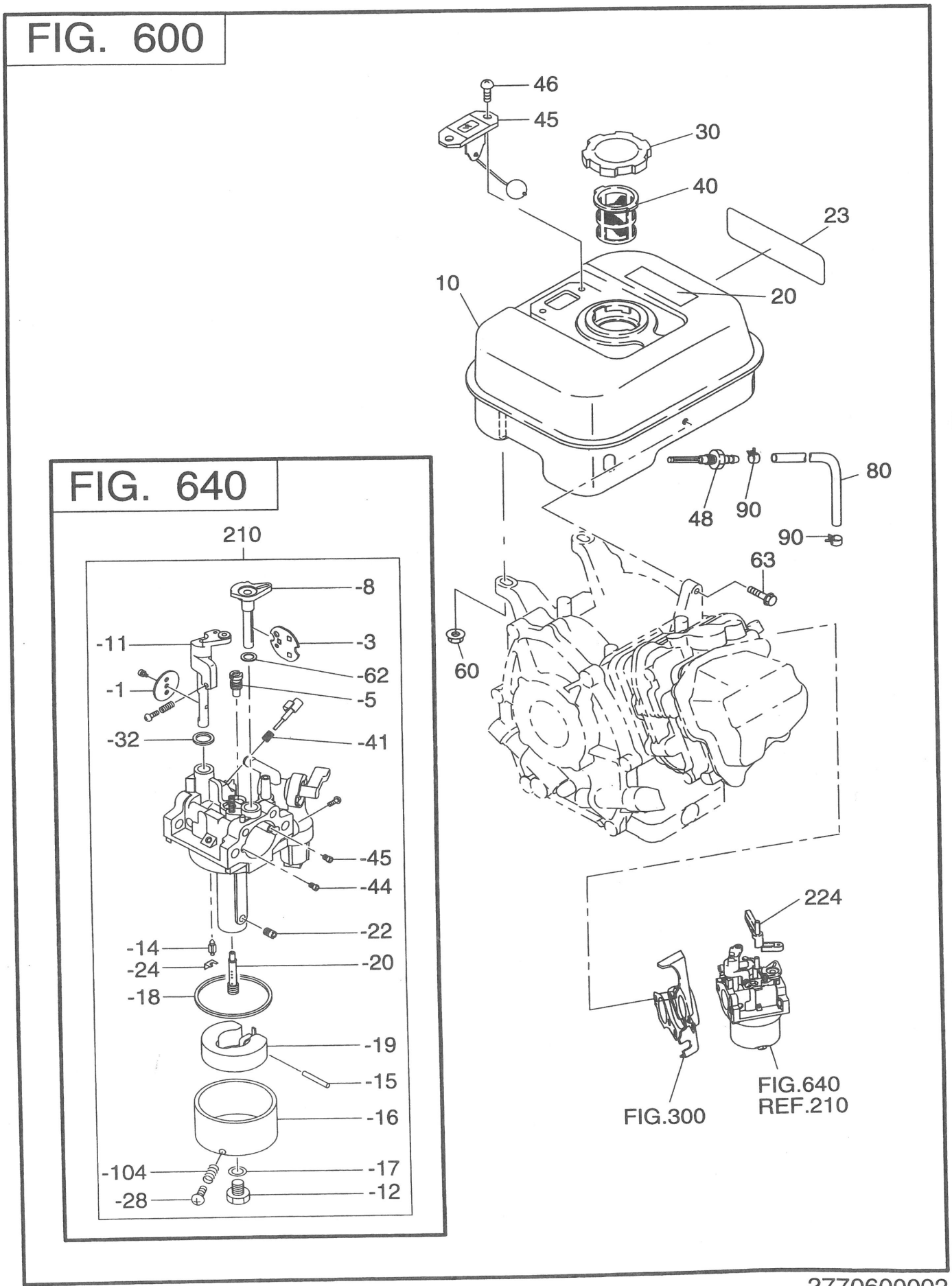

EX13/17/21

2770600002

6 FUEL LUBRICANT

REF. NO.	PART NUMBER	PART NAME	CODE NO. FROM - TO	QTY	REMARKS	INTERCHANGEABLE PART NUMBER	FIG. NO.
	PART NUMBER	SPEC. NO.					
10	277-60101-01	FUEL TANK CP	-	1	3.6L NEW R YELLOW		600
	277-60102-01	EX210D50020	-	1	3.6L BLACK		600
		EX210D51010	-	1			600
		EX210D52010	-	1			600
	277-60201-01	EX210D10020	-	1	3.6L W/GAUGE N-R YEL		600
		EX210D20010	-	1			600
		EX210D40010	-	1			600
20	073-20049-80	LABEL(WARNING)	-	1			600
	073-20051-80	EX210D00010	-	1			600
		EX210D10010	-	1			600
		EX210D10020	-	1			600
		EX210D50000	-	1			600
		EX210D50020	-	1			600
		EX210D51010	-	1			600
		EX210D52010	-	1			600
		EX210D52020	-	1			600
23	278-95101-03	LABEL(MODEL)	-	1			600
30	043-04400-50	FUEL TANK CAP CP	-	1			600
40	064-13600-10	FUEL FILTER	-	1	36DX46DX43H		600
45	* * * * * *	FUEL GAUGE CP					
	064-80002-00	EX210D10020	-	1			600
		EX210D20010	-	1			600
		EX210D40010	-	1			600
46	* * * * * *	SCREW(COUNTER HEAD)					
	014-50500-40	EX210D10020	-	2	M5X0.8X10L		600
		EX210D20010	-	2			600
		EX210D40010	-	2			600
48	050-51200-20	UNION	-	1			600
60	002-38060-00	FLANGE NUT	-	2			600
63	011-00601-30	FLANGE BOLT	-	1	M6X1.0X25L		600
80	085-10600-00	RUBBER PIPE	-	1	6DX12D		600
90	056-11000-30	HOSE CLAMP	-	2	10DX8BX1T		600
210	278-62301-00	CARBURETOR AY	-	1			640
	278-62302-00	EX210D10020	-	1			640
		EX210D20010	-	1			640
		EX210D40010	-	1			640

6 FUEL LUBRICANT

REF. NO.	PART NUMBER	PART NAME	CODE NO. FROM - TO	QTY	REMARKS	INTERCHANGEABLE PART NUMBER	FIG. NO.
	PART NUMBER	SPEC. NO.					
210	278-62302-00	EX210D50020	-	1			640
		EX210D51010	-	1			640
		EX210D52010	-	1			640
- 1	277-62535-08	THROTTLE VALVE	-	1			640
- 3	277-62525-08	CHOKE VALVE	-	1			640
- 5	252-62420-08	PILOT JET	-	1			640
- 8	277-62520-08	CHOKE LEVER	-	1			640
- 11	277-62530-08	THROTTLE SHAFT	-	1			640
	277-62531-08	EX210D10020	-	1			640
		EX210D20010	-	1			640
		EX210D40010	-	1			640
		EX210D50020	-	1			640
		EX210D51010	-	1			640
		EX210D52010	-	1			640
- 12	227-62451-08	BOLT	-	1			640
- 14	277-62500-08	NEEDLE	-	1			640
- 15	277-62515-08	PIN	-	1			640
- 16	277-62505-08	FLOAT BODY	-	1			640
- 17	214-62450-08	PACKING	-	1			640
- 18	214-62540-08	CHAMBER PACKING	-	1			640
- 19	226-62506-08	FLOAT AY	-	1			640
- 20	278-62440-08	MAIN NOZZLE	-	1			640
- 22	278-62400-08	MAIN JET	-	1			640
	226-62412-08	EX210D10020	-	1			640
		EX210D20010	-	1			640
		EX210D40010	-	1			640
		EX210D50020	-	1			640
		EX210D51010	-	1			640
		EX210D52010	-	1			640
- 24	226-62701-08	CLIP	-	1			640
- 28	277-62350-08	BOLT	-	1			640
- 32	* * * * * *	SEAL					
	246-62390-08	EX210D10020	-	1			640
		EX210D20010	-	1			640
		EX210D40010	-	1			640
		EX210D50020	-	1			640

6 FUEL LUBRICANT

REF. NO.	PART NUMBER	PART NAME	CODE NO. FROM - TO	QTY	REMARKS	INTERCHANGEABLE PART NUMBER	FIG. NO.
	PART NUMBER	SPEC. NO.					
- 32	246-62390-08	EX210D51010	-	1			640
		EX210D52010	-	1			640
- 41	230-62446-08	SPRING	-	1			640
- 44	107-62410-08	AIR JET	-	1			640
- 45	106-62410-08	AIR JET(PILOT)	-	1			640
- 62	* * * * * *	SEAL					
	236-62680-08	EX210D10020	-	1			640
		EX210D20010	-	1			640
		EX210D40010	-	1			640
		EX210D50020	-	1			640
		EX210D51010	-	1			640
		EX210D52010	-	1			640
-104	236-62541-08	PACKING	-	1			640
224	277-43801-01	CHOKE LEVER CP	-	1			600

FIG. 700

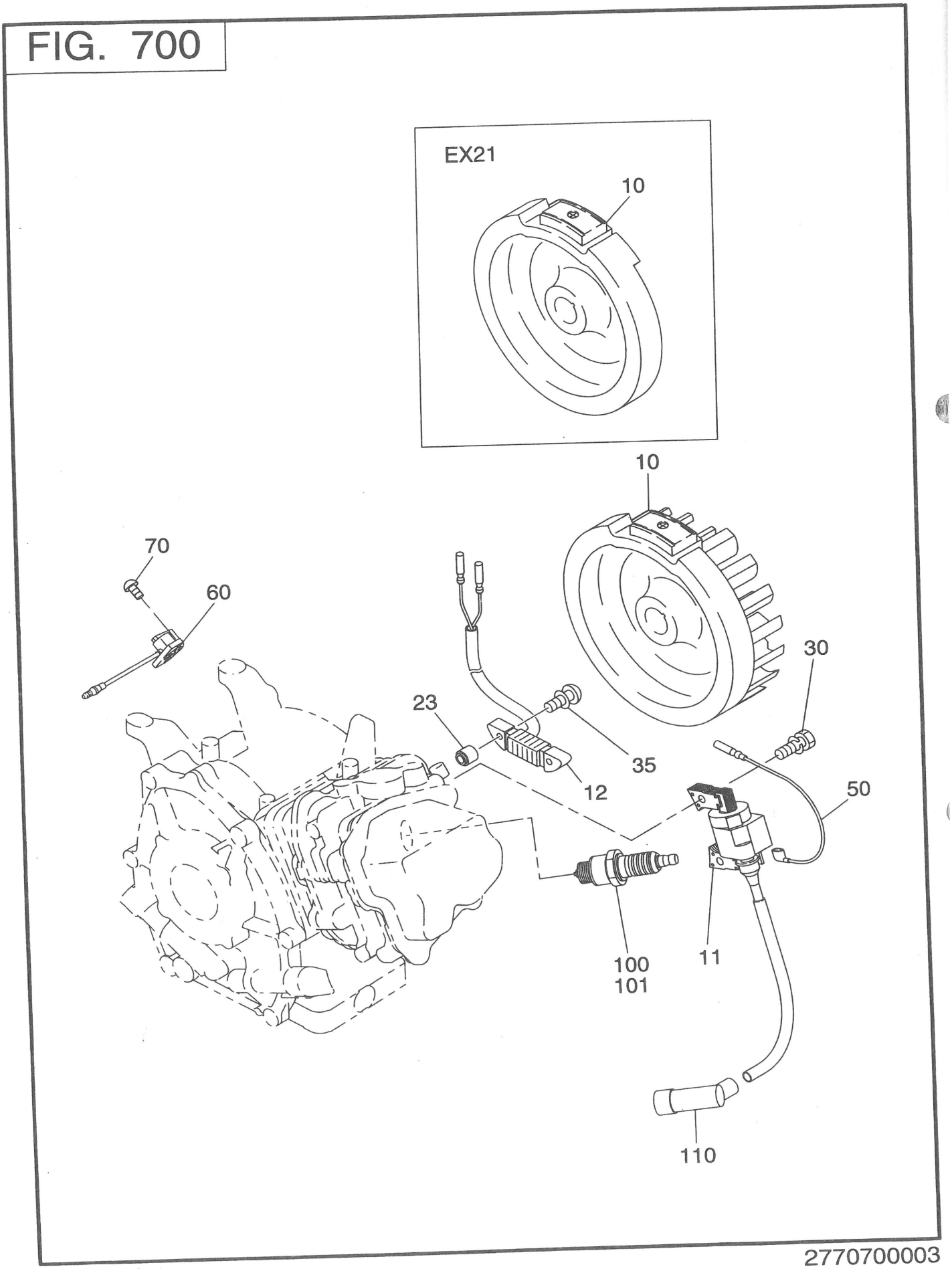

2770700003

EX13/17/21

FIG. 770

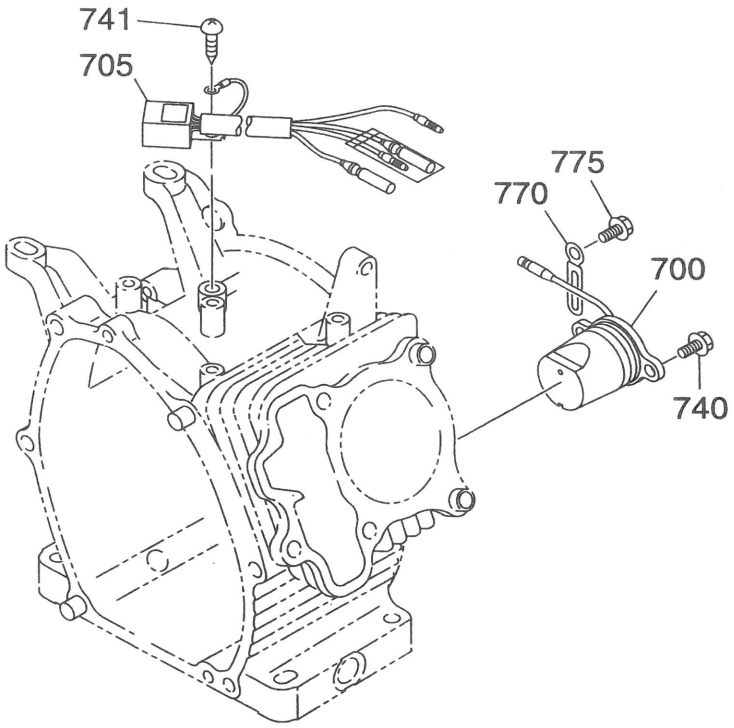

EX13/17/21

2770770002

7 ELECTRIC DEVICE

REF. NO.	PART NUMBER	PART NAME	CODE NO. FROM - TO	QTY	REMARKS	INTERCHANGEABLE PART NUMBER	FIG. NO.
	PART NUMBER	SPEC. NO.					
10	278-79240-11	FLYWHEEL CP	-	1			700
	278-79241-01	EX210D20010	-	1			700
11	277-79430-11	IGNITION COIL CP	-	1			700
12	* * * * * *	LAMP COIL CP					
	277-79301-01	EX210D20010	-	1			700
23	* * * * * *	SPACER					
	277-79501-03	EX210D20010	-	1			700
30	001-14062-50	BOLT AND WASHER AY	-	2			700
35	* * * * * *	BOLT AND WASHER AY					
	001-13063-50	EX210D20010	5511-	2			700
	004-35062-50	EX210D20010	-5510	2			700
50	277-73101-01	WIRE 1 CP	-	1	L=360 BLACK CB104TER		700
	277-73102-01	EX210D20010	-	1	L=360 BLACK CW104TER		700
		EX210D50020	-	1			700
		EX210D51010	-	1			700
		EX210D52010	-	1			700
		EX210D52020	-	1			700
60	X66-00003-61	SWITCH AY	-	1			700
70	015-00400-90	TAPPING SCREW	-	2	M4X10L		700
100	065-01401-50	SPARK PLUG	-	1	NGK BR6HS		700
101	RL86C	SPARK PLUG	-	1	CHAMPION		700
110	065-50002-70	SPARK PLUG CAP	-	1			700
700	* * * * * *	OIL SENSOR CP					
	277-76301-01	EX210D20010	-	1			770
		EX210D50020	-	1			770
		EX210D51010	-	1			770
		EX210D52010	-	1			770
		EX210D52020	-	1			770
705	* * * * * *	FLOAT C/U CP3					
	KU3-11043-01	EX210D20010	-	1			770
		EX210D50020	-	1			770
		EX210D51010	-	1			770
		EX210D52010	-	1			770
		EX210D52020	-	1			770
740	* * * * * *	BOLT AND WASHER AY					
	001-14061-60	EX210D20010	-	2			770

7 ELECTRIC DEVICE

REF. NO.	PART NUMBER	PART NAME	CODE NO. FROM - TO	QTY	REMARKS	INTERCHANGEABLE PART NUMBER	FIG. NO.
	PART NUMBER	SPEC. NO.					
740	001-14061-60	EX210D50020	-	2			770
		EX210D51010	-	2			770
		EX210D52010	-	2			770
		EX210D52020	-	2			770
741	* * * * * *	TAPPING SCREW					
	015-20500-10	EX210D20010	-	1	M5X10L		770
		EX210D50020	-	1			770
		EX210D51010	-	1			770
		EX210D52010	-	1			770
		EX210D52020	-	1			770
770	* * * * * *	CLAMP CP					
	214-79006-01	EX210D20010	-	1			770
		EX210D50020	-	1			770
		EX210D51010	-	1			770
		EX210D52010	-	1			770
		EX210D52020	-	1			770
775	* * * * * *	FLANGE BOLT					
	011-00600-20	EX210D20010	-	1	M6X1.0X12L		770
		EX210D50020	-	1			770
		EX210D51010	-	1			770
		EX210D52010	-	1			770
		EX210D52020	-	1			770

FIG. 900

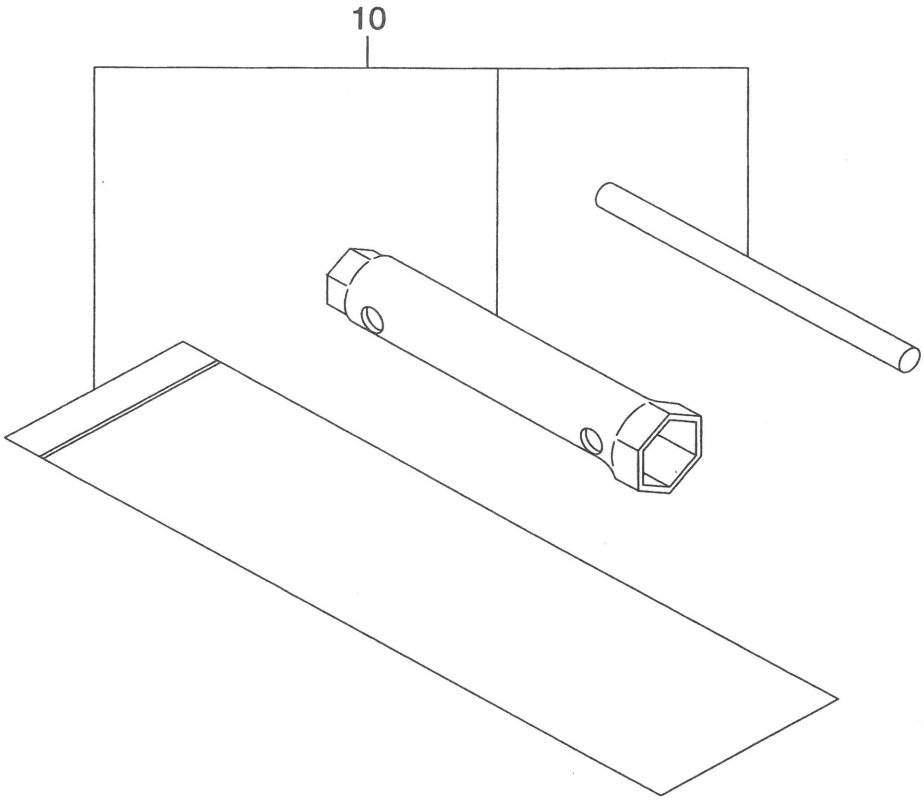

9 ACCESSORIES LABEL

REF. NO.	PART NUMBER	PART NAME	CODE NO. FROM - TO	QTY	REMARKS	INTERCHANGEABLE PART NUMBER	FIG. NO.
	PART NUMBER	SPEC. NO.					
10	277-90301-H0	ACCESSORY TOOL KIT	-	1			900